HR-1

Single-Sided Headset with Flexible Dynamic Boom Mic

The HR-1 is a single-sided, medium-weight passive noise reduction headset with dynamic noise-canceling microphones. The headset has a noise reduction rating of 21 dB; suitable for use in a moderately noisy environment. The ergonomic moleskin-covered headband design distributes the ear cushion pressure evenly over the entire ear with no pressure points, ensuring hours of comfortable wear. An added advantage of this headset design is that it folds into compact form for ease of transport and storage. Available with 4-pin male or female connectors, 5-pin male, or pigtail termination.

Features

Boom Microphone

Headband Pressure Adjustments

Wiring Diagram

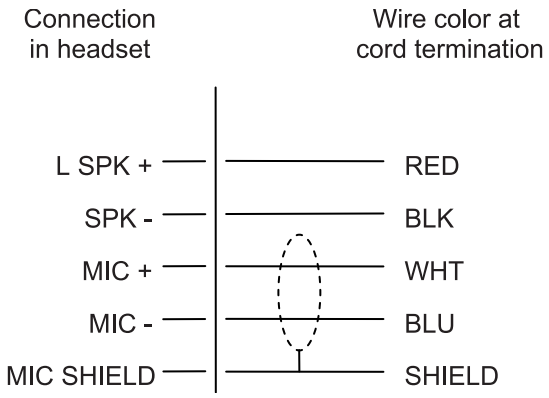

HR-1 Specifications

Connector Termination
HR-1: XLR 4-pin Female
HR-1PT: Stripped Wire
HR-1R: XLR 4-pin Male
HR-1R5: XLR 5-pin Male

Type
Single-Sided

Mic Type
Dynamic Noise-Canceling

Mic Sensitivity
-65dBV/Pa @1cm

Mic Frequency Range
150Hz - 8kHz

Mic Impedance
200Ω

Speaker Sensitivity
95dB SPL @1kHz, 1mW

Speaker Frequency Range
100Hz - 3kHz

Speaker Impedance
300Ω

Weight
11oz. (not including cord)

Cord Length
5 ft.

Color
Black

Ordering Information

HR-1
Single-Sided Headset with Flexible Dynamic Boom Mic & A4F Connector
Catalog Number: 300534-007

HR-1PT
Single-Sided Headset with Flexible Dynamic Boom Mic & Pigtail Termination
Catalog Number: 300534-006

HR-1R
Single-Sided Headset with Flexible Dynamic Boom Mic & A4M Connector
Catalog Number: 300534-008

HR-1R5
Single-Sided Headset with Flexible Dynamic Boom Mic & A5M Connector
Catalog Number: 300534-009

This specifications information is preliminary and is subject to change without notification.

Brand names mentioned are the property of their respective companies.

Contact Information

Telex Communications, Inc.
12000 Portland Avenue South
Burnsville, Minnesota 55337
Telephone: 877·863·4169
Fax: (800) 323-0498

Form Number: 38109-682 Rev F
Date: December, 2007