VEGA®

TELEX® Signaling Product Company

Model DSP-223
Tone Remote Panel

Operating Software 2.6

Technical Manual

March 2005 **P.N. 803274 Rev D**

Table of Contents

1 General 1
1.1 DSP-223 Accessories 1
2 Installation 2
2.1 DSP-223 Power Supply 2
2.2 DSP-223 to Console Line Connection 2
2.3 DSP-223 to Radio Connection 2
2.3.1 TX Audio Connection 2
2.3.2 RX Audio Connection 3
2.3.3 PTT Connection 3
2.3.4 Monitor Connection 3
2.3.5 Radio Frequency Control 4
2.3.6 CTCSS Connection 4
2.4 Handset Connection 4
2.5 Digital Expansion Port 4
3 Level Settings 5
3.1 Line Receive Level Adjust Procedure 5
3.1.1 Revision G PCB's with J17 5
3.2 Radio TX Level Adjust Procedure 6
3.3 Radio RX Level Adjust Procedure 6
3.4 Line TX Level Adjust Procedure 6
3.5 CTCSS Level (Continuous Tone coded Squelch) 6
3.6 DSP –223 Detection Frequencies 6
4 Programming and Operation 7
4.1 Software Installation 7
4.2 Windows® Application Software Operation 7
4.2.1 Select a Serial Port 7
4.2.2 DSP-223 Configuration 8
4.2.2.1 Function Tone Mode 8
4.2.2.2 CTCSS Tone 8
4.2.2.3 PTT Options 8
4.2.2.4 Monitor Relay Options 9
4.2.2.5 EE/Error Beeps (Rev 2.0 or higher) 9
4.2.2.6 Line DTMF Decoder 9
4.2.2.7 Audio Loop Back 9
4.2.2.8 Individual Function Tone Setup 10
4.2.2.8.1 Tone Active 10
4.2.2.8.2 Relay 10
4.2.2.8.3 Relay Group 10
4.2.2.8.4 Relay Duration 10
4.2.2.8.5 Digital Output 11
4.2.2.8.6 CTCSS Frequency and Default 11
4.2.2.8 DIG4 Setup Button 12
4.2.2.9 DIG5 Setup Button 13
4.2.2.9.1 Voter/Ring Down Tone Generation 13

4.2.2.10 Set Gains Button 13
4.2.2.11 Morse Code Station Identifier Setup 14
4.2.2.12 Save and Load Buttons 14
4.2.2.13 Send and Receive Configuration from DSP-223 14
4.2.2.14 Radio TX Audio Filters 15
4.2.2.15 DSP-223 Audio Block Diagram 16
4.2.2.16 DSP-223 Frequency Response 16
4.3 DTMF Responder Functions 18
5 Theory of Operation 19
5.1 DSP-223 Audio Input Paths 19
5.2 DSP-223 Audio Output Paths 19
5.3 Troubleshooting Aid 19
6 Loading the DSP-223 Operational Software 20
7 Specific Radio Control 20
8 Pin out and Jumper Settings Quick Reference Table 21
9 Schematics and Parts Lists 22
9.1 PCB P/N 750561 Revisions A to E 22
9.2 PCB P/N 750561 Revision F 23
9.3 PCB P/N 750561 Revision G 24
9.4 PCB P/N 750561 Revision H 25
10 Warranty, Service, Repair, and Comments 26
11 DSP-223 Specifications 27

Table of Figures

Figure 1 DB25 Rear Connector Pin-out 2
Figure 2 Line Connector Pin-out 2
Figure 3 6 Pin Radio Connector Pin-out 3
Figure 4 Windows Programming Main Screen 7
Figure 5 Serial Communications Port Screen 7
Figure 6 Digital Output Chart 11
Figure 7 CTCSS Selection Chart 12
Figure 8 Digital 4 Setup Screen 12
Figure 9 Digital 5 Setup Screen 13
Figure 10 Gain Settings 13
Figure 11 Morse Code Encoder Setup Screen 14
Figure 12 TX Audio Parameters Screen 15
Figure 13 Software Audio Path Block Diagram 16
Figure 14 Tx Frequency Response With No Additional Filtering 16
Figure 15 Tx Frequency Response With 3.5KHz Low Pass Filter 17
Figure 16 Tx Frequency Response With 3.5KHz Filter and Pre-Emphasis 17

1 General

Unless noted, this manual refers to DSP-223 operating software 2.6.

The VegaDSP-223 tone-remote adapter provides remote control of two-way-radio base stations using any Vega tone remote consoles. The DSP-223 is also compatible with other consoles using the industry-standard sequential tone-keying format.

The DSP-223 connects to the tone remote control console(s) using any voice-grade transmission medium such as a microwave link, a leased telephone line, or a twisted-pair 600-ohm line.
All DSP-223s are capable of decoding the PTT (push-to-talk/transmitter-on) tone sequence and the voice-plus-tone signals during transmission. Control tones in the voice-plus-tone signal are filtered from the transmitted voice. All models are prepared for jumper-plug conversion from two-wire-line operation to four-wire-line operation. In the four-wire mode, the panels are full duplex capable.

The DSP-223 provides the following features:

PTT Relay
Monitor Relay
99-digit display
PTT, Monitor, and Power LED indications
F1 and F2 Relays (programmable to any function tone or Revert to F1)
6 digital outputs for channel selection, completely programmable per function tone
CTCSS generation (64 frequencies)
Hardware and software gain control
Local handset port for monitoring activity and transmission back to base or to radio
Front panel test points and level set potentiometers
RS-232C port on front panel for configuration via Windows application
Two PTT modes and three monitor modes
Eight selectable PTT frequencies
Ability to pass-through to a second tone adapter with 400ms built in delay line
Relays can be placed in any of four groups for separation of function
Single Function tone recognition (16 function tones)
Dual function tone recognition (100 function tones)
Morse Code Encoder for Automatic station identification
Automatic Gain Control
Function Tone lock-out
RX Audio Squelch
Voter Status Tone
Alarm Beeps
Pre-Emphasis
3.5kHz Low Pass Filter

All audio inputs and outputs are transient protected.

The DSP-223 line transformers are not designed to operate on lines carrying direct current. If a DC voltage is on the line, isolate with external capacitors. If the line termination must conduct direct current, install a 600:600-ohm transformer designed for the current involved.

1.1 DSP-223 Accessories

Several optional accessories are available for the DSP-223.
DSP223PRG – Programming Kit, includes cable and diskette with software
DSP223RACK – 1 unit high rack shelf to hold up to two DSP-223 units
0101239 – DSP-223/Relm Serial Interface Kit
650373 – DSP-223 DB25 Relm Radio Cable
301896000 – DSP-223/Kenwood x150/x180 Serial Interface Kit
2490248 – Black Handset

2 Installation

2.1 DSP-223 Power Supply

The DSP-223 requires a 12 to 16 volt DC, 500 mA, of clean power. Two connectors are provided to connect the unit to power. The first is a 2.5mm plug receptacle on the rear left of the unit. The positive terminal is the center conductor. The second power connection option is the DB25 connector. Figure 1 shows the pin out of this connector. Connect an external 12 to 16 volt DC supply with the positive connected to Pin 20 and the Ground connected to Pin 7.

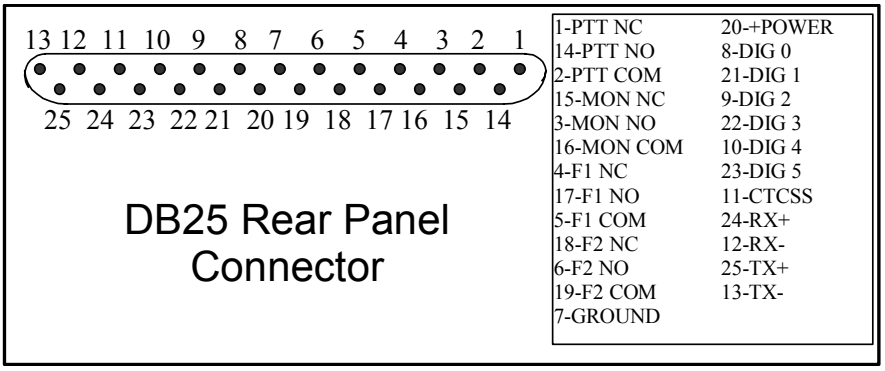

Figure 1 DB25 Rear Connector Pin-out

2.2 DSP-223 to Console Line Connection

The line connector is the right most connector on the rear of the DSP-223. Connect the two-wire leased line to pins 4 and 5 of the RJ-45 modular connector, making sure that J20 and J21 are set to position A. Four-wire operation requires J20 and J21 be set to position B and connect the outgoing line to pins 4 and 5, and the receive pins to 3 and 6.

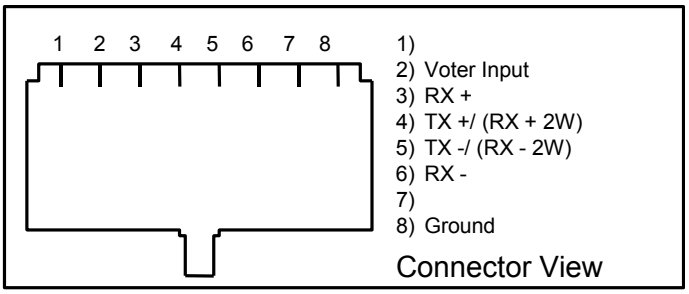

Figure 2 Line Connector Pin-out

Note: Pins 4&5 of the Line connector are the RX audio from the radio. They are transmitted back down the line to the console. Pins 3&6 of the Line connector are inputs from the console and the audio present on this pair will be sent to the radio.

There are several jumper selections that must be made for the line connection. Set the jumpers according to your connection requirements.

2 Wire / 4 Wire Selection:	J20	J21	RX Termination:	J19
2 Wire	A	A	600 Ohms	A
4 Wire	B	B	10k Ohms	B

The RX termination should be placed in position “A” on J19 for a single unit at the end of a line. If multiple units are connected in parallel, only one unit should have the RX Termination jumper in the “A” position. **Set J19 to “B” position for 2-wire operation.**

2.3 DSP-223 to Radio Connection

2.3.1 TX Audio Connection

The DSP-223 has a number of options when connecting it to the radio. Set the jumpers according to the method outlined in your radio’s owner manual.

Connection Type:	J14	J15	J22	J23
Balanced 600 Ohm:	B	B	B	B
Single Ended Low-Impedance:	A	A	A	A

If the microphone input of the radio is high-impedance, shielded cable is recommended. If the radio has a high-level microphone input, move J26 to the B position, otherwise J26 should stay in the A position.

The balanced 600-Ohm option is only available on the DB25 connector on the rear panel; see Figure 1 for the pin-out. If the TX Audio is set to single ended mode, it can be used from the TX+ pin on the DB25 or can be accessed on the smaller 6-pin rear connector. The 6 Pin connector pin-out appears in Figure 3.

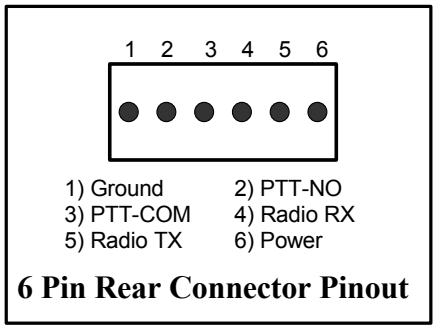

Figure 3 6 Pin Radio Connector Pin-out

2.3.2 RX Audio Connection

Set the following jumpers for the type of receive audio required:

Output Type:	J24	J25	J27
Balanced 600 Ohm:	B	B	B
Single Ended:	A	A	A

Receive Input Impedance:	J12	J13	
8 Ohms	A	B	(for a speaker output)
600-Ohm	B	A	
10k Ohm	B	B	

Connect the radio receiver audio output if balanced to pins 12 and 24 of the rear panel DB25. If the receive audio is single ended pin 24 of the rear DB25 or pin 4 of the rear 6 pin connector can be used. The audio source must be after the squelch circuit, to prevent sending continuous noise to the remote console. If a high-impedance point in the receiver is used, shielded cable is recommended.

Note: When the speaker output is used, the radio volume control will affect the audio levels of the DSP-223.

2.3.3 PTT Connection

Connect the radio PTT circuit to the PTT relay contact terminals. Connections on the DB25 or the 6 pin connectors may be used. Usually the common of the relay contact switch is grounded and the normally open contact connects to the PTT input. It is also possible to ground the common of the relay internal to the unit by bridging the pads of JP2 with wire and soldered closed.

2.3.4 Monitor Connection

Connect the radio MON circuit to the MON relay contact terminals of the DB25 connector. Usually the common of each relay contact switch is grounded and the normally open contact connects to the MON input. It is also possible to ground the common of the relay internal to the unit by bridging the pads of JP3 with wire and soldered closed.

2.3.5 Radio Frequency Control

The DSP-223 provides two relays that may be used for radio channel control. F1 and F2 contacts may be connected through the rear DB25 connector. Usually the common of each relay contact switch is grounded and the normally open contact connects to the radio frequency-control terminals.

In addition to the two standard relay closures, six lines of digital I/O are available. These lines are open-collector transistor outputs. They can be programmed on a per line basis to generate any of 64 combinations. A programmed option is also available that does not change the digital I/O.

Each line is active low and may be jumper selected to pull up to either +5v or the power supply voltage (minimum +12v). Jumper J16 is used to select the pull up voltage. The A position pulls to the power supply value and B pulls up to +5v.

Refer to *Section 4.2.2.9.5 Digital Output* for programming the digital outputs.

2.3.6 CTCSS Connection

The DSP-223 is designed to generate a full range of CTCSS frequencies. Each function tone can be assigned its own CTCSS frequency for PTT operation or a number of CTCSS tones can be set using different function tones. A single ended, capacitor coupled, low impedance output is available on pin 11 of the rear panel DB25 connector.

2.4 Handset Connection

The Telex Handset (P/N 249248) may be connected to the DSP-223 to monitor receive and transmit audio. When the handset PTT switch is pressed, the DSP-223 will be key up the radio on the existing frequency and the handset microphone audio will be transmitted.

Pressing the **PTT-IC** button on the front panel provides an intercom connection between the DSP-223 and the tone remote console.

2.5 Digital Expansion Port

The Digital Expansion Port on the rear panel of the DSP-223 provides a second serial communications connection for use in controlling various base station radios. A plug-in serial add-on PCB must be installed to enable this connector. This port is configured as a function of the specific application and the data is restricted to the control of specific radios. It is not intended as a general communications port to a PC.

3 Level Settings

Once the unit is connected into the system, the level potentiometers can be set as shown in Table 1.

3.1 Line Receive Level Adjust Procedure

The line RX level is the first level that must be set because all of the tone decoding is based on this level. Connect an Oscilloscope, RMS voltmeter, or dBm meter to Ground (TP-12) and Line RX audio (TP-2) test points on the front of the DSP-223.

Inject the known highest signal level into the line receive circuitry. An external generator or a console can generate this with a test tone capability. Using Table 1, find the value of the injected signal level in the left most column (Actual RX Input (dBm)).

In the case of the DSP-223 being connected as a standard tone remote, the MAX input +10dBm column shows the level to adjust the RX Line Potentiometer to. This assumes that the standard +10dBm Guard Tone will be used.

The DSP-223 must be tuned to allow this +10dBm signal to be decoded without overdriving the inputs (max 3.5Vp-p) of the Analog to Digital Converter (ADC). On the row of the injected signal level, find the column that matches the measurement units of the device attached to the Line RX level test points on the front panel. Adjust the Line RX Potentiometer (R68) until it is close to the value listed in the table. This will allow the unit to work over its entire range without saturating the ADC. Note that this measurement is a signal level measurement of the voltage that is supplied to the ADC used by the DSP to decode the various required tones.

RX POT Setup for Vega DSP Based Products

Actual RX Input (dBm)	Max Input +10dBm Set RX To:			Max Input 0dBm Set RX To:				Direct Crossover dBm to Volts Table		
	Vrms	Vpp	dBm	Vrms	Vpp	dBm		dBm	Vpp	Vrms
10	1.13	3.20	3					10	6.90	2.44
9	1.02	2.88	2					9	6.25	2.21
8	0.92	2.60	1					8	5.60	1.98
7	0.79	2.24	0					7	5.00	1.77
6	0.74	2.08	-1					6	4.50	1.59
5	0.68	1.92	-2					5	4.00	1.41
4	0.62	1.76	-3					4	3.60	1.27
3	0.55	1.56	-4					3	3.20	1.13
2	0.51	1.44	-5					2	2.88	1.02
1	0.40	1.14	-6					1	2.60	0.92
0	0.36	1.02	-7	1.13	3.20	3		0	2.24	0.79
-1	0.33	0.92	-8	1.02	2.88	2		-1	2.08	0.74
-2	0.29	0.81	-9	0.92	2.60	1		-2	1.92	0.68
-3	0.26	0.74	-10	0.79	2.24	0		-3	1.76	0.62
-4	0.22	0.63	-11	0.74	2.08	-1		-4	1.56	0.55
-5	0.20	0.56	-12	0.68	1.92	-2		-5	1.44	0.51
-6	0.18	0.52	-13	0.62	1.76	-3		-6	1.14	0.40
-7	0.16	0.46	-14	0.55	1.56	-4		-7	1.02	0.36
-8	0.14	0.41	-15	0.51	1.44	-5		-8	0.92	0.33
-9	0.13	0.37	-16	0.40	1.14	-6		-9	0.81	0.29
-10	0.12	0.34	-17	0.36	1.02	-7		-10	0.74	0.26
-11	0.11	0.30	-18	0.33	0.92	-8		-11	0.63	0.22
-12	0.10	0.28	-19	0.29	0.81	-9		-12	0.56	0.20
-13	0.09	0.25	-20	0.26	0.74	-10		-13	0.52	0.18
-14				0.22	0.63	-11		-14	0.46	0.16
-15				0.20	0.56	-12		-15	0.41	0.14
-16				0.18	0.52	-13		-16	0.37	0.13
-17				0.16	0.46	-14		-17	0.34	0.12
-18				0.14	0.41	-15		-18	0.30	0.11
-19				0.13	0.37	-16		-19	0.28	0.10
-20				0.12	0.34	-17		-20	0.25	0.09

Table Usage:
1) Place a known signal level into the RX terminals of the Vega device being setup.
2) Determine the maximum signal level that the device will see. This table supports +10 and 0 dBm
3) Using the values from #1 and #2, Lookup #1 in the left column and move to the grouping for #2
4) Set the RX pot for the value in the table

Table 1

3.1.1 Revision G PCB's with J17

Starting with PCB Revision G, jumper J17 has been added to provide a wider decode range. With J17 in the "A" position the DSP223 will perform like previous versions. When J17 is in the "B" position, a 6dbm gain is added to the input of the ADC after PTT is engaged.

Setup is different with J17 in "B". When the DSP223 is in PTT, adjust the Line RX Potentiometer (R68) for –15dbm at Line RX audio (TP-2) test point.

3.2 Radio TX Level Adjust Procedure

Due to the large range of input requirements for the radios that can be connected to the DSP-223, there is not a prescribed way of setting the Radio TX levels. Radio TX test points (TP-5 & TP-6) on the front panel of the DSP-223 provide a location to measure the actual value being placed onto the radio TX inputs. The Radio TX gain potentiometer (R7) can be used to adjust these levels. Note if the unit is placed into single ended mode with jumpers J14, 15, 22, and 23 the Radio TX+ should be measured with respect to ground. The user also has the option of placing J26 into the "A" position to decrease the output of the TX line by a factor of 10. The final adjustment should allow for undistorted audio to be transmitted for the full range of transmission levels at the desired deviation. Soldering JP6 together will increase the radio TX output adjustment range.

3.3 Radio RX Level Adjust Procedure

The Radio RX level input to the DSP-223's ADC can be measured by connecting an Oscilloscope or Meter to the ground and Radio RX test jack (TP-3) on the front of the unit. The maximum expected receive level should be set so that the measurement at the test points is approximately 3.4 volts peak-to-peak or 1.2 volts RMS. This insures that the receive audio from the radio will not overdrive the input circuitry of the DSP-223. The usage of Table 1 can help facilitate this by following the directions for setting the Line RX levels. If the radio will not be generating a level above 0dBm, the 5-7 columns of the table can be used with a known input value to set the maximum level seen by the ADC. If the radio max level output will be below 0 dBm the Radio RX (R98) gain can be set higher to accommodate this.

3.4 Line TX Level Adjust Procedure

The Line TX level is the last item that should be adjusted. With the unit connected to the 600 Ohm line, connect an oscilloscope, meter reading true RMS, or a meter with an output in dBm to the Line TX test points (TP-7 & TP-8) on the front of the DSP-223. There are three ways to generate the required test tone for setting the levels. The easiest is to "double click" the IC PTT button on the front panel. A 1-minute 0dBm test tone will be sent on the Line and Radio TX lines. Pressing the IC PTT button again during the tone output will turn off the output. The second option, with the receive levels already set and a console capable of generating DTMF tones onto the Line RX pair, press "*0#8". A 15 second, 1kHz, 0dBm tone will be placed on the TX line pair. The third method to generate the tone is to move the test jumper, J11 to the "B" position. As long as the test jumper is in the "B" position, a 0dBm 1kHz tone will be placed on the TX line pair. This does require opening the case. Adjust the Line TX Potentiometer (R12) until the measured voltage is 2.2 Volts peak-to-peak, 0.77 volts RMS, or 0dBm. Soldering JP7 together will increase the Line TX output adjustment range.

3.5 CTCSS Level (Continuous Tone coded Squelch)

The CTCSS Level can be measured by connecting an oscilloscope or RMS meter to the ground and CTCSS test point (TP-13) on the front of the DSP-223. With the radio connected to the CTCSS output, have the remote console key up so that CTCSS is present. Adjust the CTCSS Potentiometer (R149) until the level is as desired.

3.6 DSP –223 Detection Frequencies

The DSP-223 has been factory-tuned to the following frequencies. The user of the DSP-223 has no ability to change the detection frequencies as they are coded into the software. However any actual function or output can be made to work with any existing programmed frequency. Please consult the factory for special requirements for frequency selections.

Guard tone/PTT Tone: 2175 Hz
MON Function Tone: 2050 Hz
Frequency Select Function Tones (where used)

F1: 1950 Hz	**F5:** 1550 Hz	**F9:** 1150 Hz	**F13:** 750 Hz
F2: 1850 Hz	**F6:** 1450 Hz	**F10:** 1050 Hz	**F14:** 650 Hz
F3: 1750 Hz	**F7:** 1350 Hz	**F11:** 950 Hz	**F15:** 550 Hz
F4: 1650 Hz	**F8:** 1250 Hz	**F12:** 850 Hz	**F16:** 450 Hz

4 Programming and Operation

All programming for the DSP-223 is through an RS-232C serial port located on the front panel of the unit. Programming kit (P/N DSP223PRG) may be purchased separately from the DSP-223 and installed on a Windows 95 or newer computer. The latest DSP-223 operating software and Windows® application may also be down loaded from www.vega-signaling.com/dspsoftware.htm

4.1 Software Installation

The Windows® application file is included on the **VEGA Product Information CD** provided with the DSP-223.
Launch the CD and click on **Firmware** – then click on **DSP-223**. Follow the instructions for saving the file to the PC. When the application starts, an opening screen as shown in Figure 4 should appear.

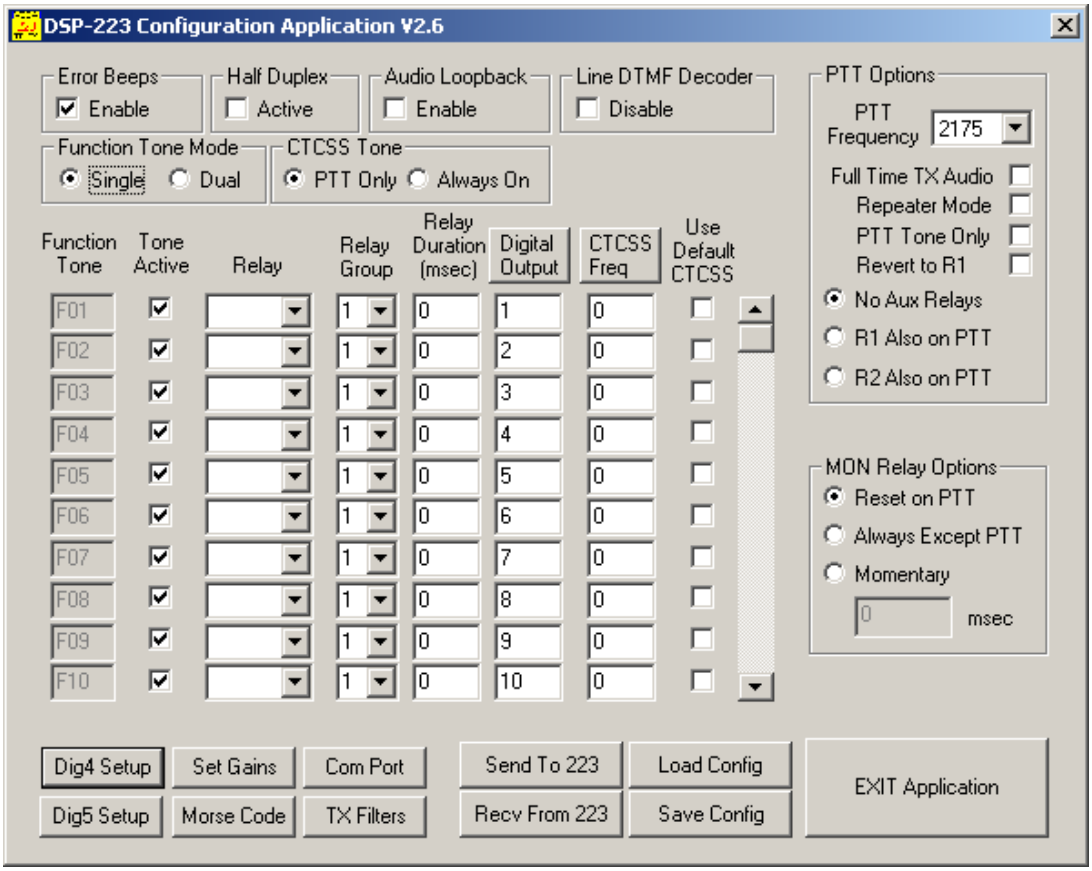

Figure 4 Windows Programming Main Screen

4.2 Windows® Application Software Operation

4.2.1 Select a Serial Port

Clicking **Com Port** on the main menu screen opens the dialog box shown in Figure 5. Select either **Com1** or **Com2** and then click **OK** to close the dialog box. The Windows® application will set the serial port configuration. A 9 pin serial cable is provided to connect the DSP-223 and the PC.

NOTE: The selected port is not saved and will default to Com1 each time the software is run.

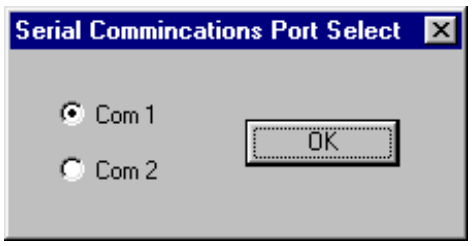

Figure 5 Serial Communications Port Screen

4.2.2 DSP-223 Configuration

Each button and programming field is described in the sections that follow.

4.2.2.1 Function Tone Mode

In the upper left corner is a selection for single or dual function tone mode. Single function tone mode requires that the controlling console generate its Guard tone and then a single 40ms function tone. Dual function tone mode requires that the controlling console generate the Guard tone and then two consecutive function tones, which are then combined to form a 00-99 function tone. The standard function tones and their frequencies are shown in the following table.

Function Tone Number	Frequency (Hz)	Function Tone Number	Frequency (Hz)
F1	1950	F9	1150
F2	1850	F10	1050
F3	1750	F11	950
F4	1650	F12	850
F5	1550	F13	750
F6	1450	F14	650
F7	1350	F15	550
F8	1250	F16	450

Dual function tones use tones F1-F10 and construct the final function tone value by combining the first received tone as the tens digit and the second received tone as the ones digit. F10 is used as a zero. For example: Function tone 9 would be transmitted as F10-F9, Function tone 43 would be F4-F3, and so forth.

It is very important that DSP-223 be programmed for the type of signaling that is being sent from the controlling consoles. It is possible to put the unit into the dual tone mode and send single tones and have it recognize them correctly. This mode is more prone to errors however. The best way to make this work is to make certain that no tones are sent for 40ms after the first function tone is sent so that a no tone can be decoded. If the 2175 hold tone, or other audio is present, the DSP-223 will attempt to decode this as the second half of the dual function tone.

The DSP-223 will also error beep back to the console if it was unable to decode a function sequence from the console. This consists of a short sequence of 3-4 beeps.

Selecting single or dual function tone mode will set the number of function tones that can be programmed by scrolling in the data entry table between 16 and 100 respectively.

4.2.2.2 CTCSS Tone

Two options are provided to set the CTCSS operation. **PTT Only** sets the CTCSS generator active during PTT detection only. **Always On** sets the CTCSS tone generator active at all times regardless of the PTT status.

4.2.2.3 PTT Options

The **PTT Options** Section configures the DSP-223 while PTT is active. These options control the PTT relay, R1 and R2 relays with respect to PTT, the received console PTT frequency as well as the PTT mode.

PTT Frequency selects the Hold tone frequency received from the console. The selectable frequencies are:

2100 Hz	2325 Hz
2155 Hz	2600 Hz
2175 Hz	2800 Hz
2300 Hz	2970 Hz

The **Repeater Mode** introduces a 400ms audio delay in the transmit path and removes the Hold tone notch filter. If the unit detects a valid Guard-Function sequence, it will key up the DSP-223 immediately. With the 400ms delay, the Guard Function is repeated out the radio interface. If the DSP-223 detects the Hold tone, it will remain keyed up allowing one radio to serve as the link to another DSP-223.

PTT Tone Only causes the DSP-223 to not respond to a function tone and key up on detection of a valid Hold tone. This will eliminate all options that are function tone based, but allows the DSP-223 to be used in a most basic manner. This mode is useful for alignment when only a single tone generator is available and not a tone remote console

Revert to R1 energizes relay R1 at the end of a PTT sequence. It will either latch it on or energize it for the time programmed for R1 in the function tone table. For example, if F1 uses R1 and has a timer setting of zero, the **Revert to R1** option will latch the R1 relay at the end of the PTT sequence. If F1 has R1 selected and has a timer value set for R1, then at the end of the PTT, R1 will latch on for the timer value and then turn off. Note that all function tones that utilize R1 must have the same timer value setting. The setup software enforces this by changing all values for R1 when one is changed.

The operation of auxiliary relays R1 and R2 as a function of PTT is selectable. When selected, R1 or R2 will close at the same time as the PTT relay. Connection to the relay contacts may be made through the DB25 connector on the rear panel. No auxiliary relay operation may also be selected.

4.2.2.4 Monitor Relay Options

The **MONITOR** function provided in the DSP-223 decodes the valid tone sequence and provides a relay-contact closure to turn off the sub-audible-tone-decoder circuit in the radio receiver, allowing the console operator to monitor the channel for other users before transmitting (required by FCC regulations on stations equipped with continuous-tone-coded-squelch signaling). Connection to the monitor relay contacts is provided through the DB25 connector on the rear panel. On single-user stations not equipped with sub-audible signaling, or where the CTCSS decoders are disabled, the monitor function relay output may be used for any purpose such as interrogation of a status-reporting system at the station site. The monitor function may be programmed to operate in one of three modes.

The DSP-223 provides three options for the MONITOR relay action. **Reset on PTT** resets the monitor relay when PTT goes active. **Always Except PTT** latches the MON relay at all times except when PTT is active, whether the monitor function tone is received or not. **Momentary** sets the monitor relay for a programmed period of time.

4.2.2.5 EE/Error Beeps (Rev 2.0 or higher)

The DSP223 will display “EE” on the front panel LED display and transmit error beeps to the dispatch console when an un-decodable signal is received on the line RX. To defeat the error beep feature uncheck the checkbox.

4.2.2.6 Line DTMF Decoder

When checked, the DSP-223 will not respond to DTMF tones sent by the console.

4.2.2.7 Audio Loop Back

When checked, the DSP-223 will route all audio received at the Line RX terminals back to the Line TX terminals. In addition all functions continue to work within the DSP-223. This allows for a number of consoles to be bridged together and still monitor traffic of consoles on separate bridge segments. This function is typically used in 4-wire systems only.

4.2.2.8 Individual Function Tone Setup

The middle grid area of the main screen menu is used to set the actions of the DSP-223 when a particular function tone is received. The left most column is the function tone number. If the **Function Tone Mode** is set to single function tone, tones F1-F16 may be programmed. If the **Function Tone Mode** is for dual function tone, tones F00-F99 may be programmed.

4.2.2.8.1 Tone Active

The **Tone Active** column allows the user to lockout a function tone in the DSP223. When a box is checked, the DSP-223 will respond to the selected function tones and operate as programmed.

4.2.2.8.2 Relay

The **Relay** column allows the user to select a relay closure to be associated with a particular function tone. Selectable options are R01, R02, or no relay. Clicking the drop down list and selecting the desired relay will program the relay be closed immediately upon receipt of the function tone.

NOTE: R01 = F1 and R02 = F2 with reference to the schematic.

4.2.2.8.3 Relay Group

The **Relay Group** allows the relays to be grouped into separate functions. This sets more than one relay to be energized at any particular time by assigning separate groups. For example, if F1 has R1 selected as its relay, and F2 has R2 selected as its relay, setting the two Relay Group numbers to the same value will result in: when F1 is received R1 turns on and R2 turns off. In this scenario, F1 and F2's relays are interlocked. If F1 and F2 have different assigned relay groups, receiving F1 does not turn off R2. Further, if a function tone has no relay selected, but has a relay group assigned that is used by another relay group, when that function is received, all relays in that group will be turned off. This allows R1 and R2 to be assigned to different groups and use other function tones with the same relay group to turn them off.

4.2.2.8.4 Relay Duration

The **Relay Duration** sets the relay closure time. When a function tone is received, the relay closes. After the time expires, the relay will open. The timer entry is in milli seconds (i.e. 1000 mSec = 1 second). Setting the relay duration to 0 latches the relay on when the function tone is received.
CAUTION: two function tones with the same relay assigned cannot have the relay close for different durations. Therefore, if the user selects R1 for F1 and F6 and set the duration for F1 to 2000ms, the F6 relay duration entry will automatically be set to 2000ms by the application software.

4.2.2.8.5 Digital Output

Each function tone may be assigned a digital output. Valid entries are 0 – 64 that control the outputs labeled DIG0-DIG5. This is a binary output corresponding to the value entered. The table below shows the values and the resulting DIG0-DIG5 outputs.

An entry of 64 will cause the digital outputs to ***REMAIN SET*** at the current value and not change.

VALUE	D5	D4	D3	D2	D1	D0	VALUE	D5	D4	D3	D2	D1	D0
0	L	L	L	L	L	L	**32**	H	L	L	L	L	L
1	L	L	L	L	L	H	**33**	H	L	L	L	L	H
2	L	L	L	L	H	L	**34**	H	L	L	L	H	L
3	L	L	L	L	H	H	**35**	H	L	L	L	H	H
4	L	L	L	H	L	L	**36**	H	L	L	H	L	L
5	L	L	L	H	L	H	**37**	H	L	L	H	L	H
6	L	L	L	H	H	L	**38**	H	L	L	H	H	L
7	L	L	L	H	H	H	**39**	H	L	L	H	H	H
8	L	L	H	L	L	L	**40**	H	L	H	L	L	L
9	L	L	H	L	L	H	**41**	H	L	H	L	L	H
10	L	L	H	L	H	L	**42**	H	L	H	L	H	L
11	L	L	H	L	H	H	**43**	H	L	H	L	H	H
12	L	L	H	H	L	L	**44**	H	L	H	H	L	L
13	L	L	H	H	L	H	**45**	H	L	H	H	L	H
14	L	L	H	H	H	L	**46**	H	L	H	H	H	L
15	L	L	H	H	H	H	**47**	H	L	H	H	H	H
16	L	H	L	L	L	L	**48**	H	H	L	L	L	L
17	L	H	L	L	L	H	**49**	H	H	L	L	L	H
18	L	H	L	L	H	L	**50**	H	H	L	L	H	L
19	L	H	L	L	H	H	**51**	H	H	L	L	H	H
20	L	H	L	H	L	L	**52**	H	H	L	H	L	L
21	L	H	L	H	L	H	**53**	H	H	L	H	L	H
22	L	H	L	H	H	L	**54**	H	H	L	H	H	L
23	L	H	L	H	H	H	**55**	H	H	L	H	H	H
24	L	H	H	L	L	L	**56**	H	H	H	L	L	L
25	L	H	H	L	L	H	**57**	H	H	H	L	L	H
26	L	H	H	L	H	L	**58**	H	H	H	L	H	L
27	L	H	H	L	H	H	**59**	H	H	H	L	H	H
28	L	H	H	H	L	L	**60**	H	H	H	H	L	L
29	L	H	H	H	L	H	**61**	H	H	H	H	L	H
30	L	H	H	H	H	L	**62**	H	H	H	H	H	L
31	L	H	H	H	H	H	**63**	H	H	H	H	H	H
			64				No Change						

Figure 6 Digital Output Chart

NOTE: Digital output bits D4 or D5 are not active if DIG4 or DIG5 are enabled

4.2.2.8.6 CTCSS Frequency and Default

This value allows the user to set the CTCSS frequency for a given function tone. When the function tone is received, the CTCSS tone generator frequency is set to the value corresponding to the number entered. An entry of 0 corresponds to no tone. If the **Use Default CTCSS** checkbox to the right of the CTCSS Frequency box is checked (see Figure 4), the value in the CTCSS tone box is ignored and the last selected value is generated during PTT. For example, F1 is used for all transmissions and the default CTCSS box is checked for F1. F2-F8 has different CTCSS values programmed for them without

the CTCSS default box checked. Selecting F2 and then keying up on F1 will set the CTCSS tone to the value in the F2 row. Selecting F4 would set the CTCSS tone in the F4 row. When PTT is pressed, F1 is the default frequency and the F4 CTCSS tone is sent. Some consoles, such as the Vega C-1610 and 6124 have a paired mode that makes this operation very simple. The CTCSS tone lookup table appears below.

Tone #	Freq. (Hz)	Tone #	Freq. (Hz)	Tone #	Freq. (Hz)	Tone #	Freq. (Hz)
1	**33.0**	17	**71.9**	33	**123.0**	49	**183.5**
2	**35.4**	18	**74.4**	34	**127.3**	50	**186.2**
3	**36.6**	19	**77.0**	35	**131.8**	51	**189.9**
4	**37.9**	20	**79.7**	36	**136.5**	52	**192.8**
5	**39.6**	21	**82.5**	37	**141.3**	53	**196.6**
6	**44.4**	22	**85.4**	38	**146.2**	54	**199.5**
7	**47.5**	23	**88.5**	39	**151.4**	55	**203.5**
8	**49.2**	24	**91.5**	40	**156.7**	56	**206.5**
9	**51.2**	25	**94.8**	41	**159.8**	57	**210.7**
10	**53.0**	26	**97.4**	42	**162.2**	58	**218.1**
11	**54.9**	27	**100.0**	43	**165.5**	59	**225.7**
12	**56.8**	28	**103.5**	44	**167.9**	60	**229.1**
13	**58.8**	29	**107.2**	45	**171.3**	61	**233.6**
14	**63.0**	30	**110.9**	46	**173.8**	62	**241.8**
15	**67.0**	31	**114.8**	47	**177.3**	63	**250.3**
16	**69.4**	32	**118.8**	48	**179.9**	64	**254.1**

Figure 7 CTCSS Selection Chart

4.2.2.8 DIG4 Setup Button

This grouping allows the DSP-223 to mute the radio RX input in the event of an active logic signal on Pin 10 (DIG4) of the DB25 radio interface connector. **Enable Dig4 as COR Input** must be checked to enable the feature. **Active High** sets the polarity of the active logic signal. If checked, the radio RX will be muted when an active high is present and not muted when low.

The subset feature to polarity is the R1 and R2 check boxes. When one of these boxes is checked, that relay will close with the active state setting. The relay will also close from other programmed features. If RX Mute is in an active state when changing the programming to OFF, power to the DSP223 will have to be cycled to reset the RX audio path.

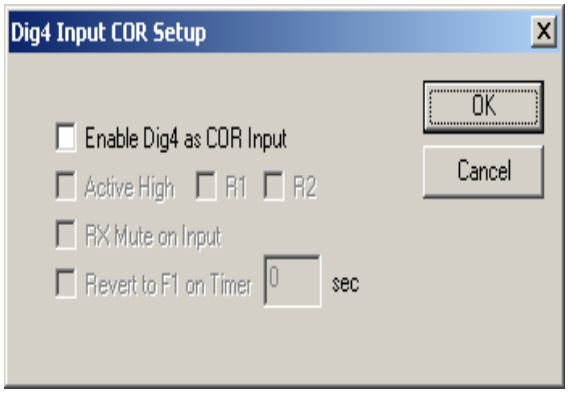

Figure 8 Digital 4 Setup Screen

The fourth checkbox will force the DSP223 to revert to F1 programming after the entered time expires if no PTT or a COR logic changes occur.

NOTE: Digital output bits D4 or D5 are not active if DIG4 or DIG5 are enabled

4.2.2.9 DIG5 Setup Button

4.2.2.9.1 Voter/Ring Down Tone Generation

This grouping allows the DSP-223 to generate a user-defined tone on the Line TX pair in the event of an active logic signal on Pin 2 of the line connector or Pin-23 (DIG5) of the DB25 connector. **Enable Tone on Dig5 Input** must be checked to enable the feature. **Active High** sets the polarity of the active logic signal. If checked, the programmed tone will be generated when an active high is present and no tone will be generated when low.

The subset feature to polarity is the R1 and R2 check boxes. When one of these boxes is checked that relay will close with the active state setting. The relay will also close from other programmed features.
The **Tone Frequency and Level** boxes specify the frequency and the amplitude of the tone to be summed with receive audio. Entries of 300-3000Hz are valid. Typically a –20dBm signal is used. Some experimentation with this value may be required to get the proper performance.

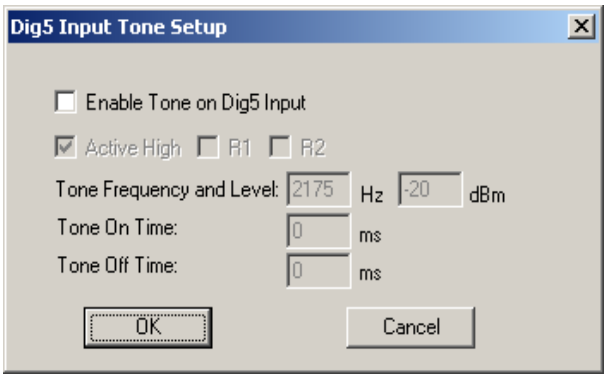

Figure 9 Digital 5 Setup Screen

Tone On/OFF Time sets the duty cycle of the tone to create “alarm beeps” generated when DIG5 is active. Entries of 0 to 65000ms (65000ms = 65 seconds) are the allowed programmable times. An entry of zero (0) into the field generates a continuous tone.

NOTE: Digital output bits D4 or D5 are not active if DIG4 or DIG5 are enabled

4.2.2.10 Set Gains Button

Figure 10 at the right shows the Gain Set dialog box. A number of gains can be controlled with this setup application. This is not a replacement to tuning the unit correctly with the potentiometers, but a supplement to allow fine-tuning of the DSP-223 operation.
The **Handset Sidetone Gain** allows the volume of the handset speaker to be adjusted by +/- 10 dB. The **Radio TX Gain** allows adjustment of the amplitude of the audio sent to the radio by +/- 10dB. The **Line TX Gain** is used to adjust the Line TX by +/- 10dB. The **CTCSS Gain** allows adjustment of the CTCSS tone level by +/- 10dB.

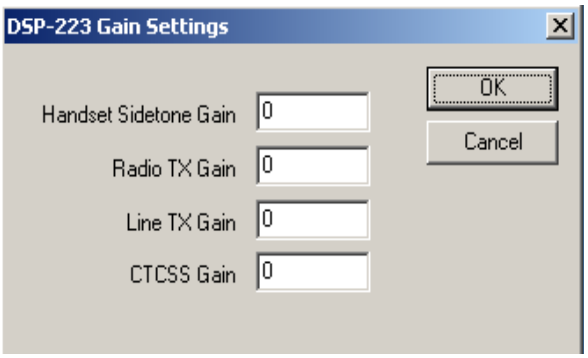

Figure 10 Gain Settings

4.2.2.11 Morse Code Station Identifier Setup

The **Morse Code** configures the DSP-223 to automatically send a Morse code signal at specified times or actions. The **Auto Transmit Options** section of the dialog box sets the automatic transmit operation. The **End of Each PTT** will send the programmed Morse code string at the end of each PTT sequence. The DSP-223 waits for the end of the hold tone and then extends the PTT time to send the Morse code sequence. The **Timer Interval** option sets the DSP-223 to transmit the Morse code at specified time intervals. The timer begins running upon setup of this parameter either at power up or after programming. If the radio is keyed up when the timer expires, The DSP-223 will wait for the loss of hold tone and then add the Morse code sequence to the end of the transmission. Depending on the customers system, FCC requires that station identification be transmitted every 15 or 30 minutes of use. If the unit is not transmitting when the timer times out, no sequence will be sent. **NOTE: The DSP-223 will not key up the radio to send the Morse code sequence**.

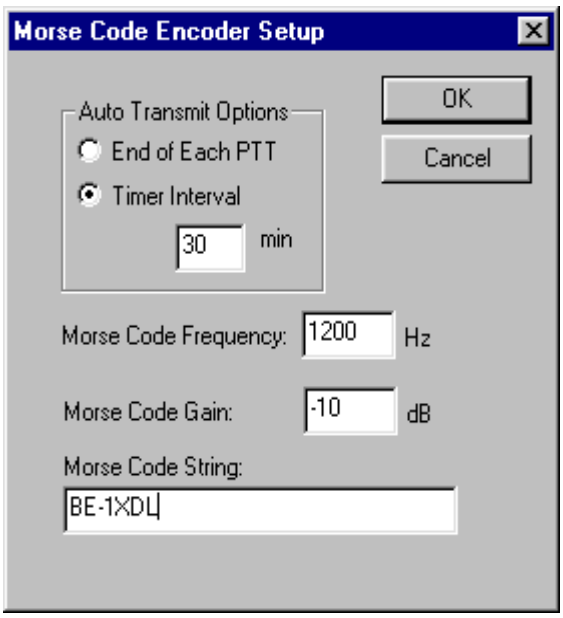

Figure 11 Morse Code Encoder Setup Screen

The **Morse Code Frequency** sets the frequency of the Morse code tone. The FCC typically requires 1200Hz unless it would cause interference. Valid entries are from 400Hz to 2000Hz.

The **Morse Code Gain** sets the transmit level. Valid values are from –40 to 0 dB. Use this value to set the deviation to the FCC required 40% level, based on your previous hardware gain settings.

Morse Code String specifies the string of up to 50 alphanumeric characters to be transmitted. Standard punctuation characters may also be entered**.**

NOTE: Programming the DSP-223 with a blank string disables the Morse code feature.

4.2.2.12 Save and Load Buttons

The user configuration data stored in a PC may be saved and reloaded into the Windows® application with the ***Save Config*** and ***Load Config*** buttons. This allows the configuration to be stored on a local hard disk or removable floppy disk.

NOTE: Configuration data MUST be compatible with the current Windows® application version

4.2.2.13 Send and Receive Configuration from DSP-223

The ***Send to 223*** and ***Recv from 223*** buttons are used to transfer configuration data between the DSP-223 and the PC. The serial port of the DSP-223 and the PC must be connected using the provided serial cable.

When all of the configuration information has been entered into the Windows® application, the data may be sent to the DSP-223 by pressing the ***Send to 223*** button. The ***Recv from 223*** button will retrieve the configuration data from the DSP-223 and display the information in the Windows® application. The user may then wish to save the data to a PC (refer to section 4.2.2.12).

If the data is transferred correctly the left decimal point will light for a few seconds and then turn off. If an error occurs, “EE” will appear in the display. The previously saved operation parameters will be restored.

4.2.2.14 Radio TX Audio Filters

The **TX Filters** button sets the options for controlling the radio TX audio.

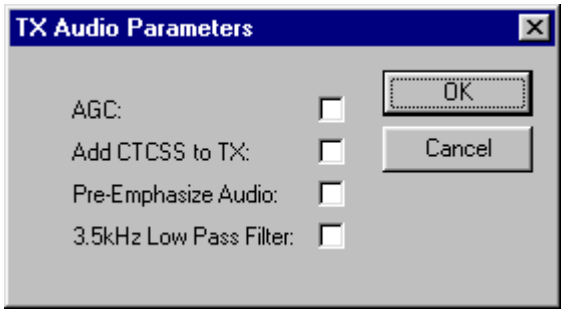

Figure 12 TX Audio Parameters Screen

4.2.2.14.1 AGC

The **AGC** checkbox adds an Automatic Gain Control or audio compression to the radio TX audio. AGC will help to increase the level of low audio, and decrease the level of loud audio, resulting in a more consistent level being transmitted.

4.2.2.14.2 Add CTCSS to TX

When checked, **Add CTCSS to TX** will add the selected CTCSS tone to the TX audio stream. The CTCSS output (pin 11 of the DB25 connector) continues to be active. This allows CTCSS to be sent on radios that don't have separate input pin for its injection into the audio stream. The user will need to make certain that no high pass filter is in place in the radio to cut off the CTCSS audio.

4.2.2.14.3 Pre-Emphasize Audio

The **Pre-Emphasis Audio** option will add a pre-emphasis zero and pole into the radio TX audio stream. The frequency response can be seen in Figure 16

4.2.2.14.4 3.5kHz Low Pass Filter

The **3.5kHz Low Pass Filter** attenuates frequencies above the cutoff frequency in the transmit audio stream. The frequency response can be seen in Figure 15

4.2.2.15 DSP-223 Audio Block Diagram

See the previous programming sections on inserting/removing the Pre-Emphasis, AGC, 3.5kHz Low Pass Filter, and the 400ms Delay options.

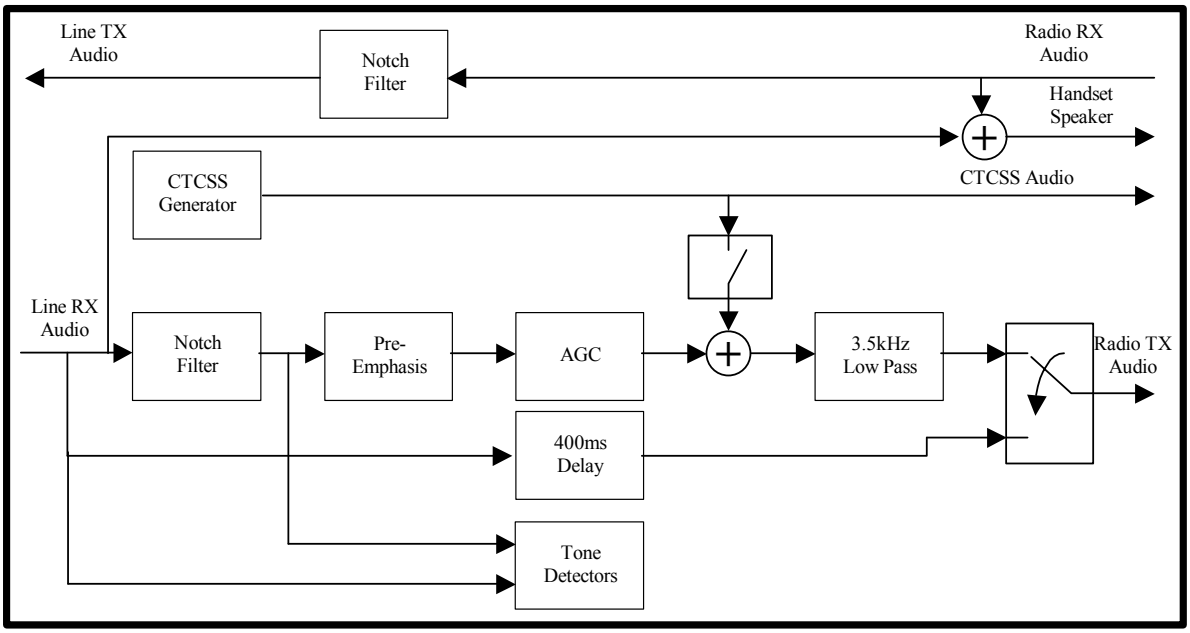

Figure 13 Software Audio Path Block Diagram

4.2.2.16 DSP-223 Frequency Response

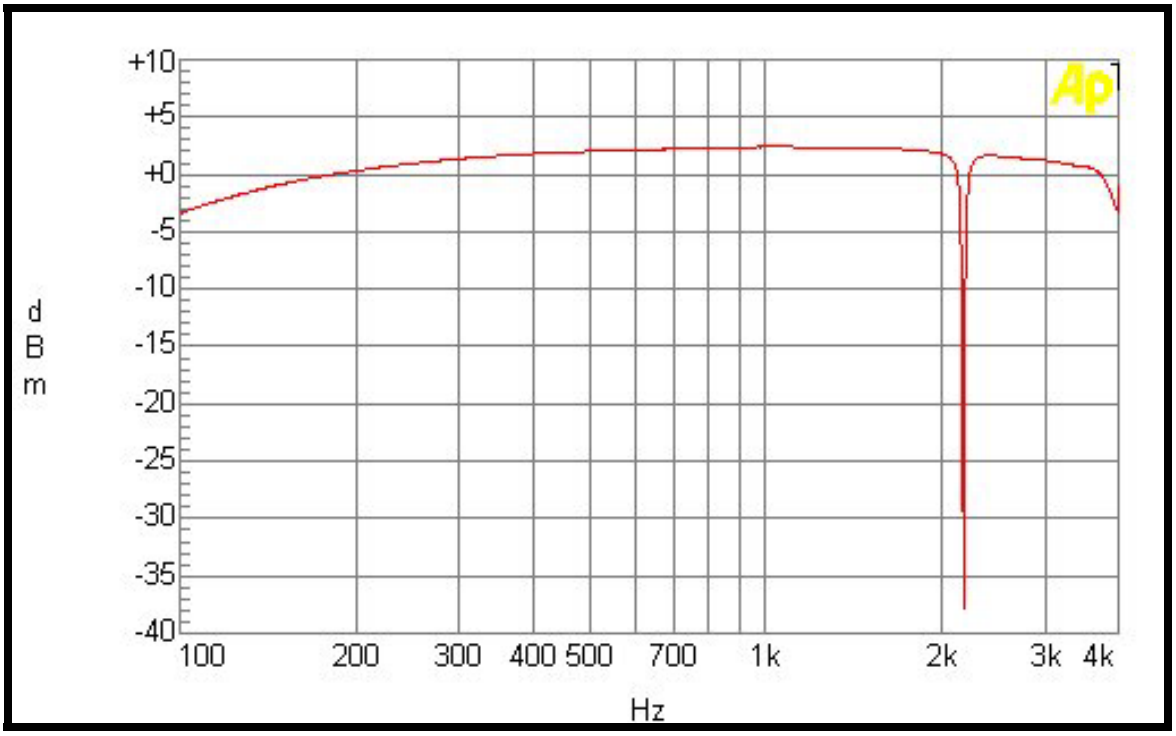

Figure 14 Tx Frequency Response With No Additional Filtering

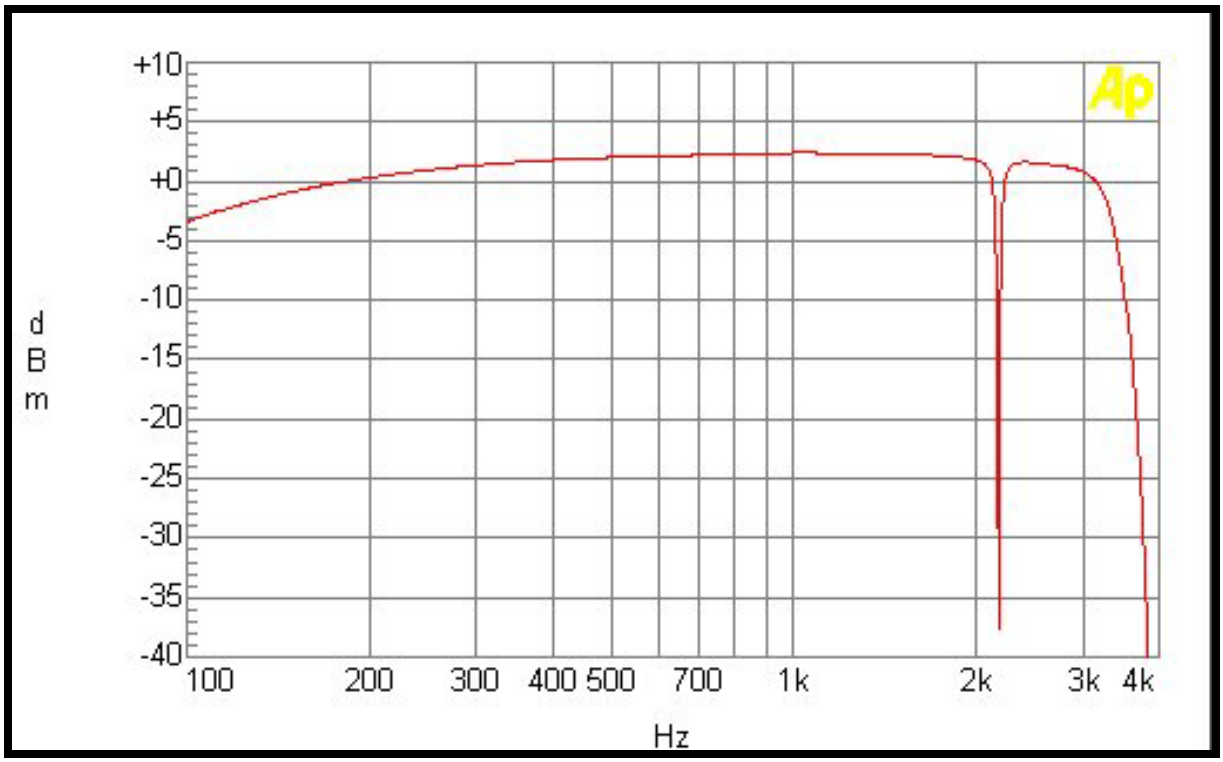

Figure 15 Tx Frequency Response With 3.5KHz Low Pass Filter

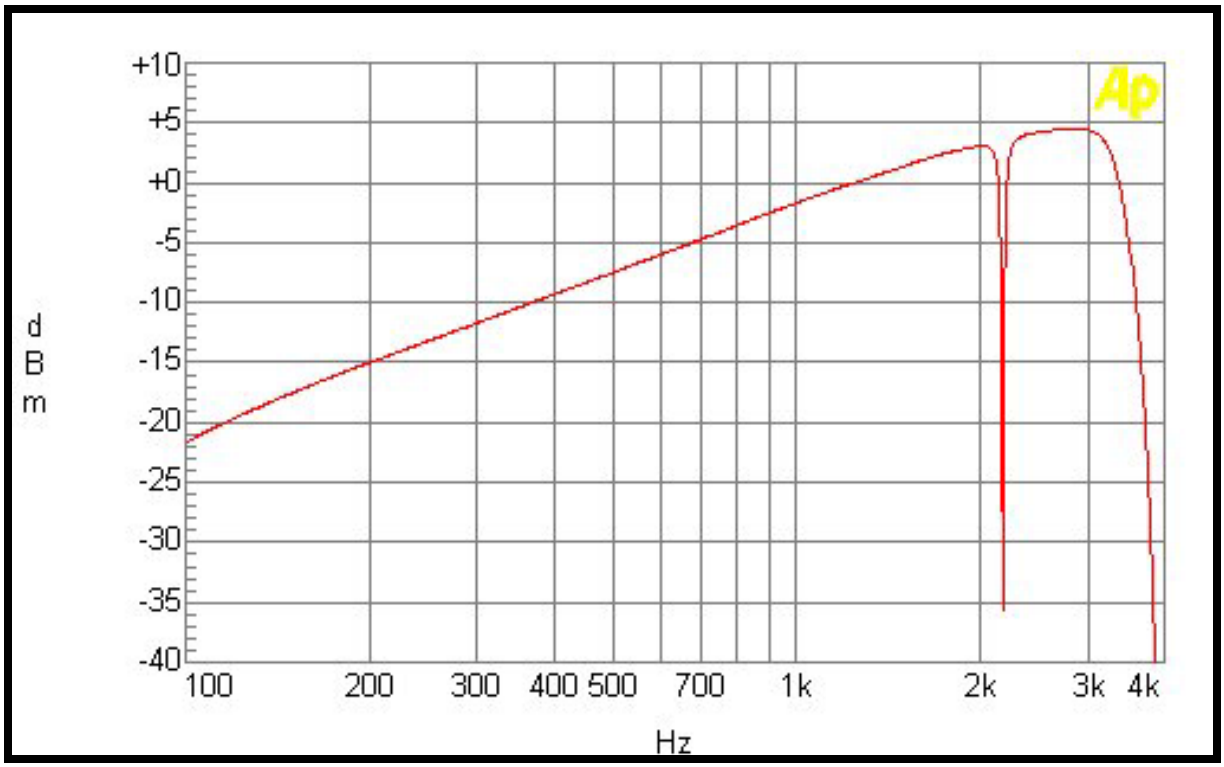

Figure 16 Tx Frequency Response With 3.5KHz Filter and Pre-Emphasis

4.3 DTMF Responder Functions

A number of DTMF sequences may be sent to the DSP-223 from the console that may be used to affect the performance of the unit or initiate a test function.

The standard activation sequence that precedes each command is DTMF ***0#**. A 2 second timer is started upon entry of the first character of the string. If the entire control string is not entered within that timeout period, the digits are discarded and the user must re-enter the string. For routines that adjust gains, the value is adjusted and saved to the non-volatile memory.

*0#1 : Increase Radio TX Gain

Sending this command will increase the Radio TX gain by 1dB. Multiple repetitions of this sequence will increase the Radio TX Gain up to +10dB.

*0#2 : Decrease Radio TX Gain

Sending this command will decrease the Radio TX gain by 1dB. Multiple repetitions of this sequence will decrease the Radio TX Gain down to -10dB.

*0#3 : Increase Line TX Gain

Sending this command will increase the Line TX gain by 1dB. Multiple repetitions of this sequence will increase the Line TX Gain up to +10dB.

*0#4 : Decrease Line TX Gain

Sending this command will decrease the Line TX gain by 1dB. Multiple repetitions of this sequence will decrease the Line TX Gain down to -10dB.

*0#5 : Increase CTCSS Gain

Sending this command will increase the CTCSS gain by 1dB. Multiple repetitions of this sequence will increase the CTCSS Gain up to +10dB.

*0#6 : Decrease CTCSS Gain

Sending this command will decrease the CTCSS gain by 1dB. Multiple repetitions of this sequence will decrease the CTCSS Gain down to -10dB.

*0#7 : Loopback Line RX to Line TX

This command will place the DSP-223 into the **Loopback Mode**. Audio received at the RX terminals of the Line interface on the DSP-223 will be echoed back onto the TX terminals. This mode lasts for approximately 15 seconds and then the DSP-223 reverts back to its normal operation.

*0#8 : Send 1kHz Tone to both Radio and Line Interfaces

This command will generate a 1kHz, 10dBm, tone on both the Radio and Line TX terminals. This can be used to set the DSP-223 TX level. The tone will last for approximately 15 seconds. There are no relay closures associated with this mode.

The following DTMF sequences are enabled for control of the Kenwood x150/x180 radio
Refer to Section 7 – Specific Radio Control for Adaptor Kit Information

*0#9 : Toggle SCAN Mode of the Kenwood x150/x180 Radio

This command will toggle the SCAN mode of the Kenwood x150/x180 Series radio on and off.

*0#10 : Send the last Kenwood FleetSync® ANI data

This command causes the DSP-223 to generate a DTMF string to the Line TX corresponding to the last seven digit Kenwood FleetSync® ANI data received by the radio.

5 Theory of Operation

The DSP-223 is a Digital Signal Processor (DSP) based product. Many of the signals that once could be probed on older products, are handled within the DSP itself. This includes DTMF decoders, notch filters, tone decoders, and all of the audio summing. Most of the gain controls are also included within the software of the DSP. Because of this, hardware is simplified at the expense of software creation time and user serviceability. The next sections discuss the portions of the DSP-223 that can be tested using a common oscilloscope and voltage meter by a qualified service technician.

5.1 DSP-223 Audio Input Paths

The DSP-223 has only a single stereo Analog to Digital Converter (ADC) U25. The left channel converts the Line receive audio and the right channel converts the Radio receive audio. A CMOS switch, U2, is used to break those paths and insert handset audio for transmission down the line or to the radio. Up to the point of entry into the ADC, the audio is analog and handled by standard op-amps. These paths can be followed on the schematic and probed with any high-impedance measurement device.

5.2 DSP-223 Audio Output Paths

The DSP-223 has two stereo Digital to Analog Converters (DACs), U3 and U4. U4's left channel drives the sidetone for the handset. U4's right channel is used for the CTCSS tone generation. U3's left channel is the line transmit audio source and the right channel of U3 is the radios transmit audio source. Once the analog signal has been reconstructed on U3 and U4, they can be measured by conventional techniques.

5.3 Troubleshooting Aid

Problem	**Possible Solution**
What is position "A" on a jumper plug	On early PCB's the "A" position of the jumper is the double line side of the silkscreen around the jumper plug.
The DSP223 will not decode	Is the power LED on the front panel ON?
	Is J11 in the "A" position?
	If in 4-wire, make sure the console TX is connected to the DSP223 line RX.
	Ensure alignment procedure **Section 3.1** of the manual is correct.
	Check telephone line continuity from dispatch console
	Verify that proper PTT frequency is selected **Section 4.2.2.5** of the manual **(Rev 2.0 operating software or higher)**
The DSP223 will not PTT radio	Does PTT LED on front panel turn ON?
	Check for proper PTT relay configuration/wiring
	Check to see if JP2 is soldered closed (if common is grounded)
	Verify that proper PTT frequency is selected **Section 4.2.2.5** of the manual **(Rev 2.0 operating software or higher)**
	Verify that function tone is not locked out **Section 4.2.2.9.1** of the manual **(Rev 2.0 operating software or higher)**
Radio TX audio is low or distorted	Check setup procedure **Section 2.3.1** of the manual.
	Check alignment procedure **Section 3.3** of the manual.
	Set J26 to opposite position, recheck.
EE and error beeps occur	Overdriving of the Line RX ADC is occurring, adjust R68 down
	Turn error beeps OFF, **Section 4.2.2.11** of the manual **(Rev 2.0 operating software or higher)**
Radio RX audio is low or distorted	Check setup procedure **Section 2.3.2** of the manual.
	Check alignment procedure **Section 3.4** of the manual.
	Check telephone line continuity to the dispatch console

Problem	Possible Solution
Unable to decode DTMF	Check setup procedure **Section 4.2.2.4** of the manual.
The DSP223 will not Monitor function radio	Does Monitor LED on front panel turn ON?
	Check for proper Monitor relay configuration/wiring
	Check to see if JP3 is soldered closed (if common is grounded)
Unable to program DSP223	Verify operating and programming software is the same revision.
	Download required files from web site www.vega-signaling.com and follow **Section 6** of the manual to update DSP223 software.

Check our web site for updated Troubleshooting aids.

6 Loading the DSP-223 Operational Software

1) The latest DSP-223 operating software and Windows® application software (and all previous versions) may be downloaded from www.vega-signaling.com/dspsoftware.htm
2) Copy all included files into a directory on your PC, if they are zipped, extract them into this directory
3) From the Start->Run, or Windows Explorer, menu run the file "winmon.exe". This file needs to be run only one time on a particular PC. It registers the drivers to communicate with the Vega products
4) Either on the desktop or from the taskbar editor, add a shortcut to the program "Flashmon.exe". Alternately it can be run from the Start->Run menu as well. The dialog box contains a few options that can be used.
5) The first step is to put the DSP-223 into programming mode. This is done by first removing power from the unit.
6) The upper left corner of the Flashmon dialog box has a pull down menu for setting the baud rate. The DSP-223 requires this value to be set to 19200. Change the baud rate to 19200.
7) With a straight through cable connected from the PCs Com1 port, (Com1 is the only option as of now) click the "Power On" button in the dialog box and then apply power to the DSP-223.
8) After a couple seconds, the message **"Power is On"** will appear in the message window of the dialog box. This indicates that communications has been established with the DSP-223 and that it is now ready to accept a software download.
9) Click on the "Program…" button. Find the file for the version of software to be flashed into the DSP-223. It will always have an extension of .BNM. Usually it will be of the form DSPVXX.BNM.
10) Double click or select the file and open it to begin the download process.
11) The verify button can be used the same way as the "Program…" button but it does not write to the flash, only verifies it.

7 Specific Radio Control

Operating software Version 2.6 enables the DSP-223 to control the Relm BK Series and Kenwood x150/x180 Series radios with serial commands from the Digital Expansion Port. If one of these radios is connected to the DSP-223 when power is applied, the DSP-223 will detect the presence of the radio and set the operating configuration. Standard radio control operations are PTT, monitor, and channel change (i.e. F1=channel 1, F2=channel 2, etc.). Power to the DSP-223 is provided by the radios.
Additional control functions for the Kenwood x150/x180 are scan on/off, FleetSync® ANI detection and EMERGENCY message receipt. The DSP-223 will generate a DTMF string corresponding to the seven digit FleetSync® ANI format on the Line TX output. A stand-alone DTMF ANI decoder (i.e. Communications Specialists Model ST-888) must be used to display the ANI information.

Adaptor kits for the specific radios are available that contain all the hardware and cables required for control of the radio. Complete instructions are also included for installation and operation of the DSP-223. The adaptor kits are:

- DSP-223/Relm Serial Interface Kit - P/N 0101239
- DSP-223/Kenwood x150/x180 Serial Interface Kit – P/N 301896000

8 Pin out and Jumper Settings Quick Reference Table

DB25 Pin		Signal	Color	PIN ON RADIO CONNECTOR
1	=	PTT N.C.	Brown	
2	=	PTT COM	Red	
3	=	MON N.O.	Orange	
4	=	F1 N.C.	Pink	
5	=	F1 COM	Yellow	
6	=	F2 N.O.	Green	
7	=	GROUND	Lt. Green	
8	=	DIG 0	Blue	
9	=	DIG 2	Violet	
10	=	DIG 4	Gray	
11	=	CTCSS	White	
12	=	RX-	Black	
13	=	TX-	Brown/WHT	
14	=	PTT N.O.	Red/WHT	
15	=	MON N.C.	Red/BLK	
16	=	MON.COM	Orange/WHT	
17	=	F1 N.O.	Orange/BLK	
18	=	F2 N.C.	Pink/BLK	
19	=	F2 COM	Yellow/BLK	
20	=	+V	Green/WHT	
21	=	DIG 1	Green/BLK	
22	=	DIG 3	Blue/WHT	
23	=	DIG 5	Violet/WHT	
24	=	RX+	Gray/BLK	
25	=	TX+	Black/WHT	
Shell	=		Shield	

Bold Face type below denotes factory setting		
J11- Factory Test Jumper	**A**	B
J12- Radio RX Input Impedance See Page 6 of manual	A	**B**
J13- Radio RX Input Impedance See Page 6 of manual	A	**B**
J14- TX Audio "A" Single Ended Low Impedance / "B" Balanced 600 Ohm	A	**B**
J15- TX Audio "A" Single Ended Low Impedance / "B" Balanced 600 Ohm	A	**B**
J16- Digital I/O Pull-up Voltage "A" +V / "B" +5VDC	**A**	B
J19- RX Line Termination "A" 600 Ohms / "B" 10K Ohms	**A**	B
J20- 2/4 Wire "A" 2-Wire / "B" 4-Wire	A	**B**
J21- 2/4 Wire "A" 2-Wire / "B" 4-Wire	A	**B**
J22- TX Audio "A" Single Ended Low Impedance / "B" Balanced 600 Ohm	A	**B**
J23- TX Audio "A" Single Ended Low Impedance / "B" Balanced 600 Ohm	A	**B**
J24- RX Audio "A" Single Ended / "B" Balanced 600 Ohm	A	**B**
J25- RX Audio "A" Single Ended / "B" Balanced 600 Ohm	A	**B**
J26- Radio TX Level "A" Low / "B" High	A	**B**
J27- RX Audio "A" Single Ended / "B" Balanced 600 Ohm	A	**B**
JP1/R95- +12V Supply to Line Connector when closed	**Open**	Closed
JP2- PTT Common Grounded when closed	**Open**	Closed
JP3- Monitor Common Grounded when closed	**Open**	Closed
JP4- F1 Common Grounded when closed	**Open**	Closed
JP5- F2 Common Grounded when closed	**Open**	Closed

9 Schematics and Parts Lists

9.1 PCB P/N 750561 Revisions A to E

This drawing, written description or specification Is a proprietary product of TELEX, Lincoln, NE, and shall not be released, disclosed, nor duplicated without the written permission of TELEX.

Telex Communications INC.

Lincoln, Nebraska USA

PART NO: **879457**

APPROVALS:	DR BY: SBC	CHKD BY:SBC	APPD BY:DEE	PROD:___	REV LEVEL:	C
	DATE:01/17/2001	DATE:01/18/01	DATE:01/18/01	DATE:___		

TITLE: **PCB ASSY, DSP223 MAIN BOARD - BE**

REVISIONS

REV	DESCRIPTION	ECO NO	DATE	APPD
A	RELEASED FOR PILOT BUILD	01-93-01	01/17/01	SBC
B	U18 TO 760319 (ADSP-2185M)	02-47-01	02/20/01	SBC
C	DELETED 7602533PS AND ADDED TO LINCOLN BILL DSP223	03-39-01	03/14/01	SBC

This drawing, written description or specification Is a proprietary product of TELEX, Lincoln, NE, and shall not be released, disclosed, nor duplicated without the written permission of TELEX.

Telex Communications INC.

Lincoln, Nebraska USA

PART NO: **879457**

APPROVALS:	DR BY: SBC	CHKD BY:SBC	APPD BY:DEE	PROD:___	REV LEVEL:	C
	DATE: 01/17/2001	DATE:01/18/01	DATE:01/18/01	DATE:___		

TITLE: **PCB ASSY, DSP223 MAIN BOARD - BE**

ITEM	NEW	QTY	TYPE	DESCRIPTION	PART NO.	DESIGNATOR
1		51	CAPACITOR	0.1UF 0805	102881186T	C1,C2,C3,C4,C5,C6,C7,C8,C9,C10,C11,
						C13,C14,C15,C16,C18,C23,C25,C28,
						C32,C35,C37,C41,C44,C60,C61,C62,C66,
						C67,C68,C69,C70,C71,C72,C76,C78,C81,
						C85,C86,C90,C94,C95,C107,C108,C109,
						C112,C113,C114,C115,C116,C117
2		4	CAPACITOR	1UF 0805	102881875T	C19,C20,C26,C36
3		6	CAPACITOR	0.01UF 0805	102881123T	C21,C24,C77,C82,C87,C91
4		2	CAPACITOR	0.47UF 1210	102881445T	C22,C27
5		2	CAPACITOR	1800PF 0805	72341140T	C29,C33
6		4	CAPACITOR	0.018UF 0805	102881126T	C30,C31,C39,C40
7		1	CAPACITOR	0.047UF 0805	102881185T	C34
8		8	CAPACITOR	0.001UF 0805	102881111T	C42,C51,C55,C59,C74,C84,C89,C93
9		8	CAPACITOR	120PF 0805	102881100T	C43,C50,C54,C58,C75,C83,C88,C92
10		8	CAPACITOR	220PF 0805	102881103T	C46,C47,C63,C64,C65,C73,C79,C80
11						
12		4	CAPACITOR	3.3UF TANT. B SIZE	102877021T	C96,C97,C98,C99
13		5	CAPACITOR	10UF TANT. B SIZE	102877065T	C103,C104,C106,C110,C111
14		1	LED	GREEN RT ANGLE	1610628	D1
15		1	SOCKET	18 PIN RT ANGLE	640137	FOR D2
16		1	LED	DUAL 7 SEGMENT GRN	760309	D2
17		1	LED	RED LED	7602702	D3
18		1	LED	RED RT ANGLE	1610630	D4
19		8	DIODE	MMBD914 SOT-23	58711000T	D5,D6,D7,D13,D14,D15,D16,D17
20		1	LED	YELLOW RT ANGLE	1610631	D8
21		1	DIODE	MMBZ5V6ALT1 SOT-23	508046000T	D9
22		3	DIODE	SMD4004	16016481SMT	D10,D11,D12
23		4	THYRISTOR	TVB230-050	710106	E1,E2,E3,E4
24		1	FUSE	1.5A SMT FUSE	7101051	F1
25		4	POLYSWITCH	miniSMDC050-2	7101045T	F6,F7,F8,F9
26		13	FERRITE	FERRITE BEAD	723511T	FB1,FB2,FB3,FB4,FB5,FB6,FB7,FB8,FB9,
						FB10,FB11,FB12,FB19
27		1	CONN	DC PWR JACK 2.5MM	59697000	J1
28		1	CONN	25 PIN DB25 FEMALE	640136	J2
29		2	HEADER	20 PIN SMT	640126	J3,J4
30		1	HEADER	6 PIN RT ANG LEADED	2862056	J5
31		1	CONN	RJ-4 PIN CONN LEADED	640123	J6
32		1	CONN	9 PIN DB9 FEMALE	59926016	J7
33		2	CONN	8 PIN MODULAR JACK	2862013	J9,J10
34		15	HEADER	3 PIN SMT	640124	J11,J12,J13,J14,J15,J16,J19,J20,J21,
						J22,J23,J24,J25,J26,J27
35		4	RELAY	SPDT SMT	730142	K1,K2,K3,K4
36		4	INDUCTOR	820UH	723510	L5,L6,L7,L8
37		33	TRANSISTOR	2N3904 SOT-23	54671200T	Q1,Q2,Q3,Q4,Q5,Q6,Q7,Q8,Q9,Q10,Q11,Q12,
						Q13,Q14,Q15,Q16,Q17,Q18,Q19,Q20,Q21,
						Q22,Q23,Q24,Q25,Q26,Q27,Q28,Q29,Q30,
						Q31,Q32,Q33
38		13	RESISTOR	0 OHM 0805	102506000T	R1,R2,R3,R20,R95,R105,R139,FB13,FB14,FB15,

LN,BE

This drawing, written description or specification Is a proprietary product of TELEX, Lincoln, NE, and shall not be released, disclosed, nor duplicated without the written permission of TELEX.

Telex Communications INC.

Lincoln, Nebraska USA

PART NO: **879457**

APPROVALS:	DR BY: SBC	CHKD BY:SBC	APPD BY:DEE	PROD:___	REV LEVEL:	C
	DATE: 01/17/2001	DATE:01/18/01	DATE:01/18/01	DATE:___		

TITLE: **PCB ASSY, DSP223 MAIN BOARD - BE**

ITEM	NEW	QTY	TYPE	DESCRIPTION	PART NO.	DESIGNATOR
						FB16,FB17,FB18
39		65	RESISTOR	10K 0805	102515300T	R4,R6,R8,R9,R10,R11,R13,R14,R15,R16,
						R17,R18,R21,R22,R23,R33,R34,R41,R42,R43,
						R48,R49,R50,R51,R53,R54,R55,R56,R65,
						R67,R69,R72,R75,R76,R77,R79,R81,R84,
						R87,R88,R89,R90,R91,R92,R93,R94,R99,
						R103,R108,R110,R112,R115,R118,R119,
						R121,R122,R124,R126,R129,R132,R133,
						R135,R138,R140,R142
40		1	RESISTOR	10 OHMS 2010	102405100T	R5
41		5	RES VAR	100K	723097-3	R7,R12,R68,R98,R149
42		1	RESISTOR	30K 0805	102515346T	R24
43		7	RESISTOR	47 OHMS 0805	102515065T	R25,R38,R62,R70,R144,R145,R146
44		4	RESISTOR	20K 0805	102515329T	R26,R36,R39,R52
45		3	RESISTOR	150 OHMS 0805	102515117T	R27,R32,R61
46		4	RESISTOR	562 OHMS 0805	102515172T	R28,R31,R44,R47
47		4	RESISTOR	267K 0805	102515441T	R29,R30,R45,R46
48		1	RESISTOR	15 OHMS 0805	102515017T	R35
49		6	RESISTOR	33K 0805	102515350T	R37,R59,R60,R63,R101,R104
50		1	RESISTOR	332 OHMS 0805	102515150T	R40
51		4	RESISTOR	100K 0805	102515400T	R57,R58,R97,R100
52		2	RESISTOR	604 OHMS 0805	102515175T	R64,R134
53		1	RESISTOR	681 OHMS 0805	102515180T	R66
54		26	RESISTOR	1K 0805	102515200	R19,R71,R73,R74,R78,R80,R82,R83,R85,R86,
						R102,R109,R111,R113,R114,R116,R117,
						R120,R123,R125,R127,R128,R130,R131,
						R141,R143
55						
56		1	RESISTOR	301 OHMS 0805	102515146T	R107
57		1	SWITCH	PUSH BUTTON SPST	57502000	SW1
58		2	TRANSFMER	10K-10K THRU-HOLE	3180246	T1,T2
59		2	TRANSFMER	600-600 THRU-HOLE	3180259	T3,T4
60		8	TEST JACK	ORANGE	2861965	TP2,TP3,TP5,TP6,TP7,TP8,TP12,TP13
61		1	IC	TL16C550CFN	760262	U1
62		1	IC	4053 SO16	53266123	U2
63		2	IC	CS4335 SO8	760263	U3,U4
64		1	SOCKET PLCC	32 PIN PLCC SOCKET	539030032T	U6 SOCKET
65						
66		2	IC	NE5532 SO8	760268	U7,U8
67		4	IC	74LCX574 SO20	760257	U9,U10,U11,U12
68		1	IC	UA7810CKTE SMT	760275	U13
69		2	IC	74LCX541 SO20	760256	U16,U17
70		1	IC	ADSP-2186M TQFP100	760319	U18
71		1	IC	AT24C16N SO8	511336000T	U19
72		1	IC	LT1181ACSW	760261	U20
73		1	IC	UA7805CKTE SMT	760260T	U21
74		3	IC	TL084 SO14	4300047	U22,U23,U24
75		1	IC	CS5330A SO8WB	760264	U25

LN,BE

This drawing, written description or specification Is a proprietary product of TELEX, Lincoln, NE, and shall not be released, disclosed, nor duplicated without the written permission of TELEX.

Telex Communications INC.

Lincoln, Nebraska USA

PART NO: **879457**

APPROVALS:	DR BY: SBC	CHKD BY:SBC	APPD BY:DEE	PROD:___	REV LEVEL:	C
	DATE: 01/17/2001	DATE:01/18/01	DATE:01/18/01	DATE:___		

TITLE: **PCB ASSY, DSP223 MAIN BOARD - BE**

ITEM	NEW	QTY	TYPE	DESCRIPTION	PART NO.	DESIGNATOR
76		1	IC	TPS70158	760306	U26
77		1	SOCKET PLCC	44 PIN PLCC SOCKET	539030044	U27 SOCKET
78		1	IC	EPM7032AE PLCC44	760267-3PS	U27 (PROGRAMMED)
79		1		32.768MHZ	780186	Y1
80		15	JUMPER	JUMPER	2515001001	FOR
81		1	PCB	PRINTED CIRCUIT BOARD	750561	
82		A/R		SOLDER PASTE	BE738	

LN,BE

This drawing, written description or specification is a proprietary product of Telex, Lincoln, NE and shall not be released, disclosed, nor duplicated without the written permission of TELEX

Telex Communications Inc.	PART NO: 879457
Lincoln, Nebraska USA	

APPROVALS	DR BY: SBC	CHKD BY: SBC	APPD BY: DEE	PROD:	REV LEVEL:	C
	DATE: 01/17/2001	DATE: 01/17/2001	DATE: 01/17/01	DATE:		

TITLE PCB ASSY, DSP223 MAIN BOARD – BE

750561 REV B
SILKSCREEN TOP

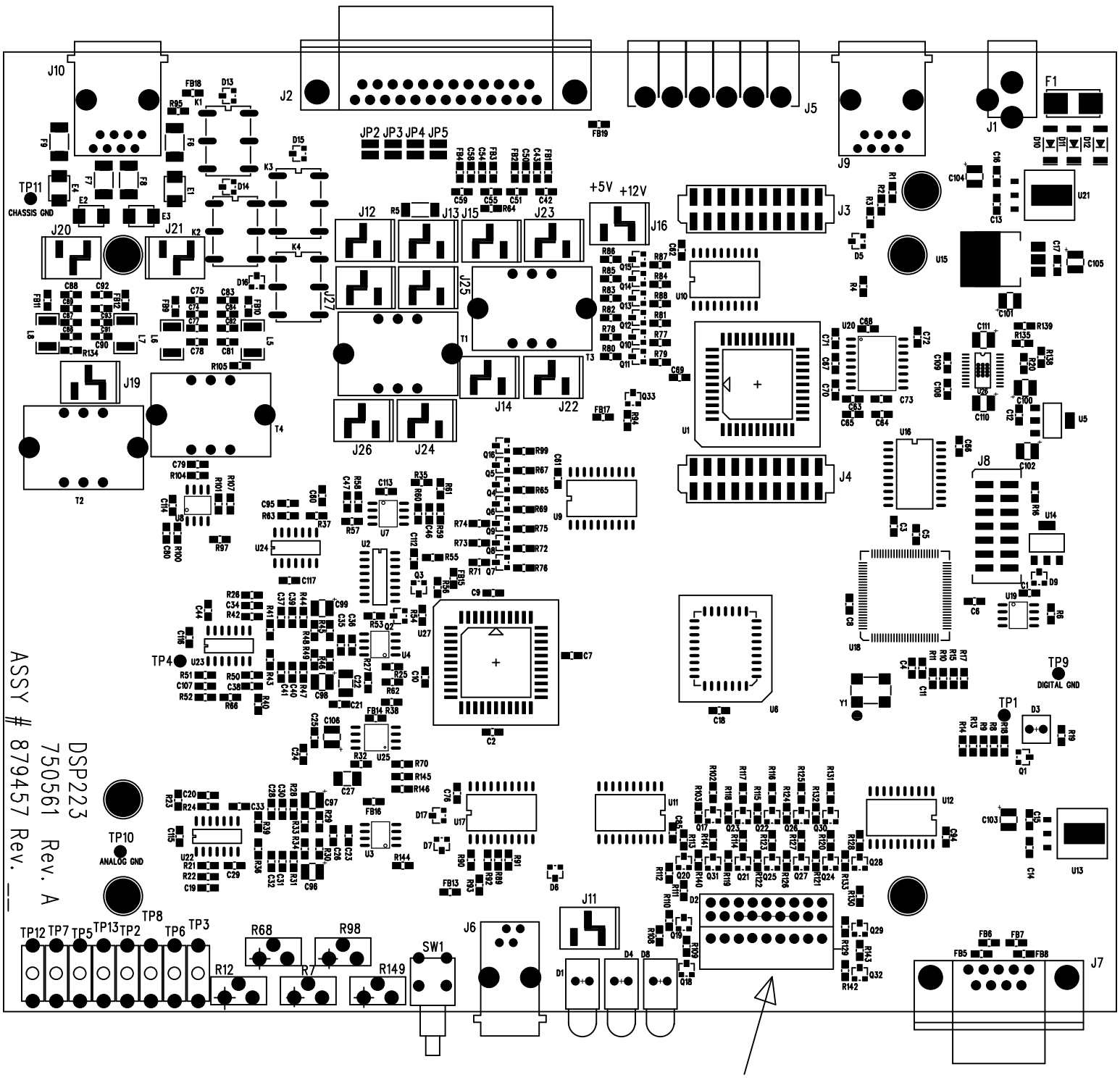

DUAL SEVEN SEGMENT DISPLAY TO BE INSERTED INTO SOCKET BEFORE SOLDERING TO BOARD. BOTTOM OF DISPLAY TO BE MOUNTED FLUSH WITH TOP OF BOARD.

REFERENCE SCHEMATIC : 770660

TOP ASSEMBLY

BE,LN

770660

This drawing, written description or specification is a proprietary product of Telex, Lincoln, NE and shall not be released, disclosed, nor duplicated without the written permission of TELEX.

NOTES:

REFERENCE PCB NUMBER : 750561

SHEET	SHEET
REV.	REVISION STATUS

REVISIONS

LOC.	REV.	DESCRIPTION	ECO NO.	DRFT	CHKR	APP	DATE
	A	RELEASED FOR PILOT BUILD		SBC			01/15/01

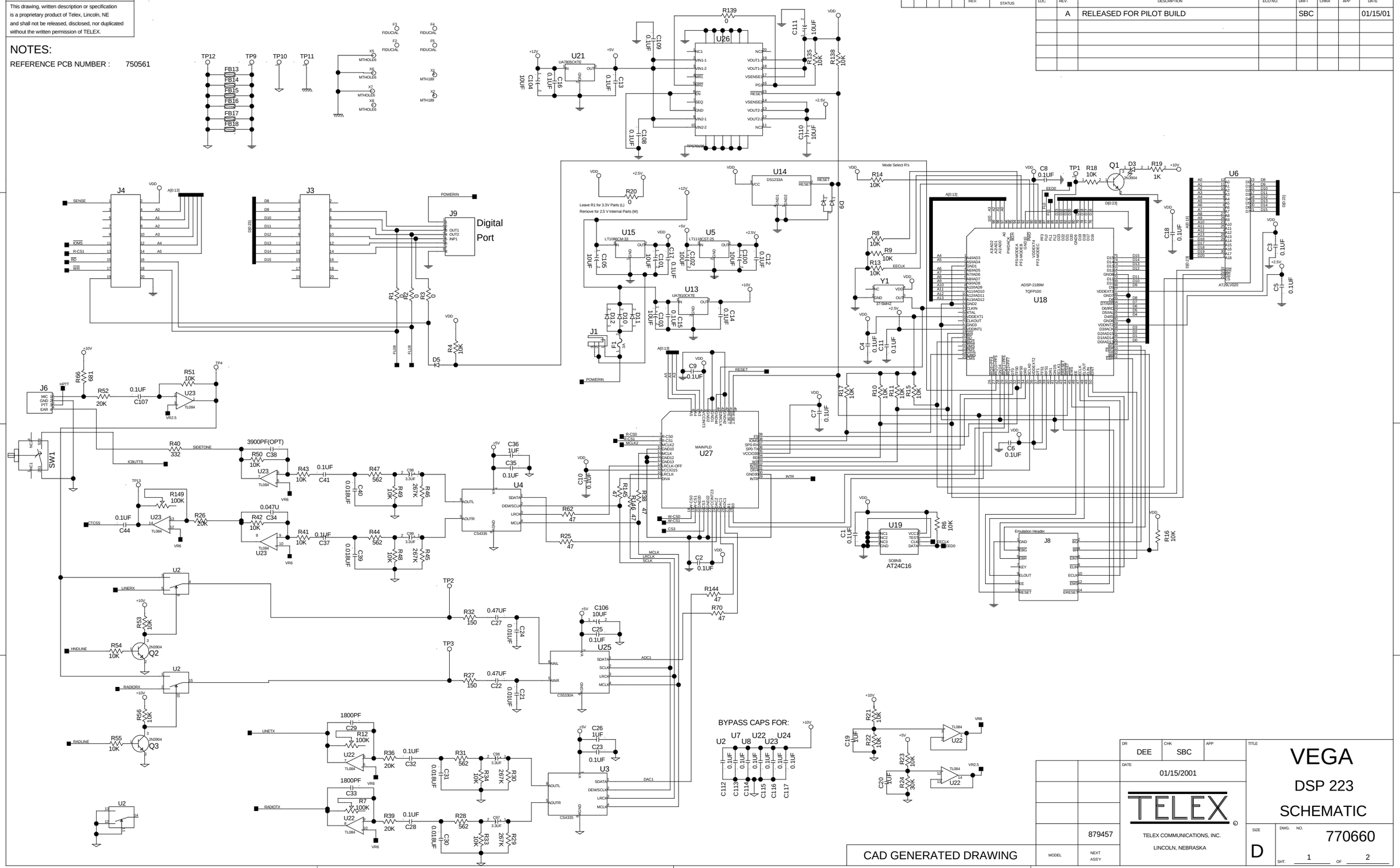

DR	CHK	APP
DEE	SBC	

DATE 01/15/2001

TELEX

TELEX COMMUNICATIONS, INC.
LINCOLN, NEBRASKA

MODEL 879457

NEXT ASS'Y

TITLE

VEGA

DSP 223

SCHEMATIC

SIZE D

DWG. NO. 770660

SHT. 1 OF 2

770660

This drawing, written description or specification is a proprietary product of Telex, Lincoln, NE and shall not be released, disclosed, nor duplicated without the written permission of TELEX.

NOTES:

REFERENCE PCB NUMBER :

SHEET REV.	SHEET REVISION STATUS

REVISIONS

LOC.	REV.	DESCRIPTION	ECO NO.	DRFT	CHKR	APP	DATE
	A	RELEASED FOR PILOT BUILD		SBC			01/15/01

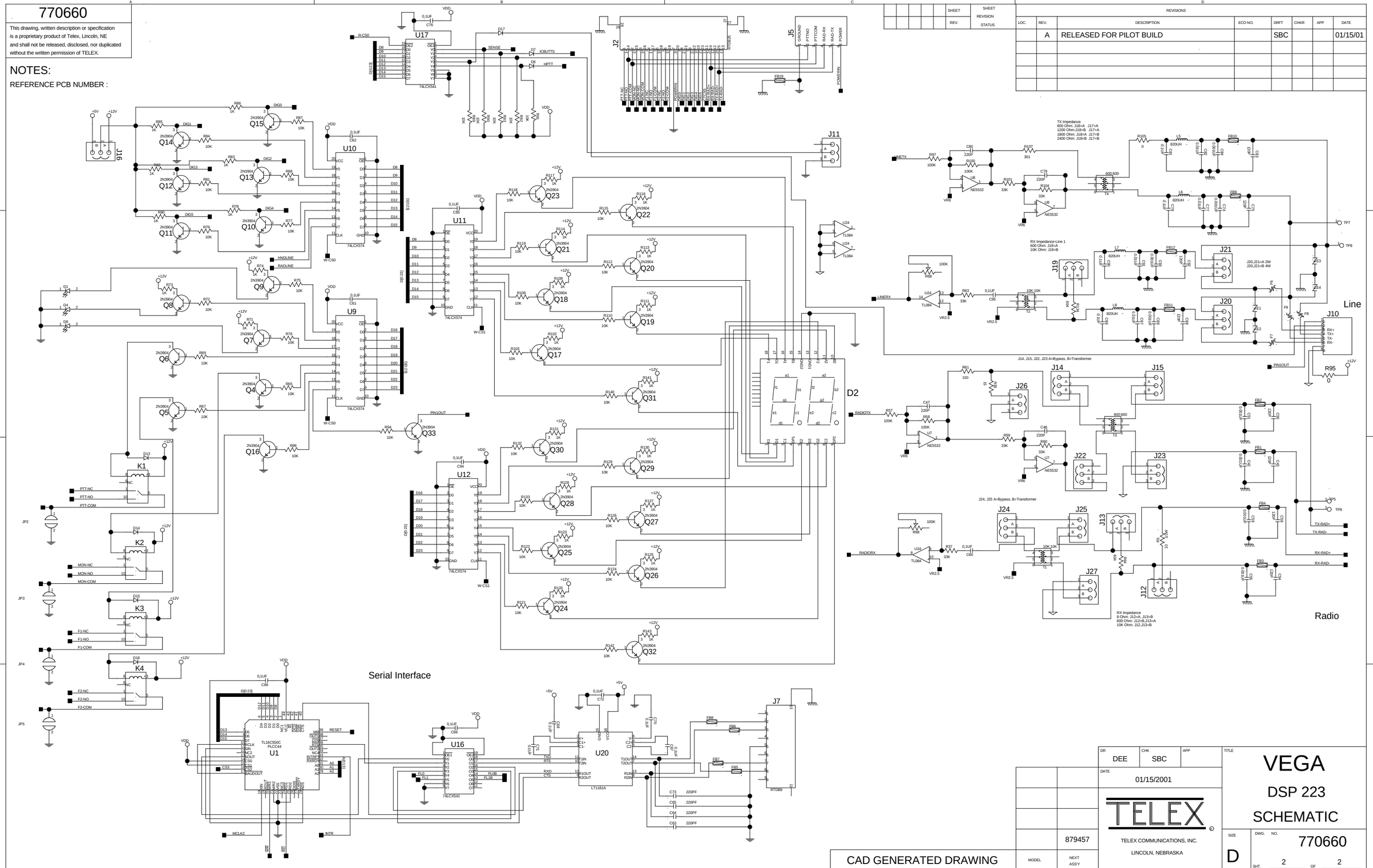

DR DEE	CHK SBC	APP	TITLE VEGA DSP 223 SCHEMATIC
DATE 01/15/2001			
TELEX			
879457	TELEX COMMUNICATIONS, INC. LINCOLN, NEBRASKA		SIZE D
MODEL	NEXT ASS'Y		DWG. NO. 770660
			SHT. 2 OF 2

CAD GENERATED DRAWING

9.2 PCB P/N 750561 Revision F

11 DSP-223 Specifications

Operating Temperature Range: 0 to 70°C for full specifications

Power Requirements: +12 to +16 Vdc, semi-regulated, 500ma.

Relay Contact Ratings: 1A at 125Vac

Radio Interface: ±45 Vdc withstand rating

Line to TX Output Gain: -10dB to +25dB, user settable

Radio Output Level: 10mVp-p to 9Vp-p for microphone level or -40 to +10dBm into 600Ω load, adjustable

Radio Output Impedance: 600Ω for balanced mode, 200Ω for single ended mode

Radio Input Level: 100mVrms to 16Vrms, adjustable

Audio Distortion: 2% THD maximum

Frequency Response: ±1.5 dB, 300 to 3000 Hz, except at 2175 Hz notch frequency

Line Output Level: -40 to +10dBm, adjustable

Line Input/Output Impedance: 600Ω nominal, or 10kΩ receive

Sensitivity: Ultimate sensitivity, -25dBm PTT tone

Frequency-Select Function Tone Decoder Tuning Range: Not tunable by field personnel, only by software change

Function-Tone Detection Bandwidth: ± 20 Hz around center of frequency

DTMF Detection Bandwidth: ± 25 Hz around center of frequency

MON timer: 10ms to 65seconds, adjustable

PTT Detect Frequencies: Programmable 2100, 2155, 2175, 2300, 2325, 2600, 2800 and 2970Hz

PTT Tone Detect Bandwidth: ± 20 Hz

Tone-Detect Stability: 100 ppm

Notch Frequency Bandwidth: 50 Hz at -3dB points. ±1Hz at –40dB.

Notch Frequency Rejection: 45 dB minimum

Morse Code Transmitter: 20 wpm, 400-2000Hz carrier selectable, 50 chars max, -40 to 0 dB or range relative to max radio level output.

Voter Status: Programmable active Hi/Low, 0 to –20dbm, 300 to 3000Hz

Radio Interface: ± 45 Vdc withstand rating

Non-Relay Outputs: Open collector, active low, 200mA maximum, 40V collector to emitter voltage

Dimensions: 8 ½” Wide, 7 1/8” Deep, by 1 5/8” High

Specifications are subject to change without notice

TELEX Communications, Inc.
Vega Signaling Products
8601 East Cornhusker Highway, Lincoln, Nebraska, 68507
Phone: (402) 465-7026 / (800) 752-7560 Fax: (402) 467-3279
E-mail: vega@telex.com, Web: www.vega-signaling.com